M201103W- Signals and Systems

ssch7_9 –Block Diagram Representations for Causal D-T LTI systems

14:10 pm Wednesday @ C107, 1st Teaching Building

14:10 pm Friday @ A107, 1st Teaching Building

Hang Zhou

hangzhou@bjtu.edu.cn

Block Diagram Representations for Causal D-T LTI systems

- **Basic interconnections**

  Cascade interconnection

  Parallel interconnection

  Feedback interconnection

- **Block diagram representations for systems**

  Direct form

  Cascade form

  Parallel form

Cascade connection

- Cascade interconnection

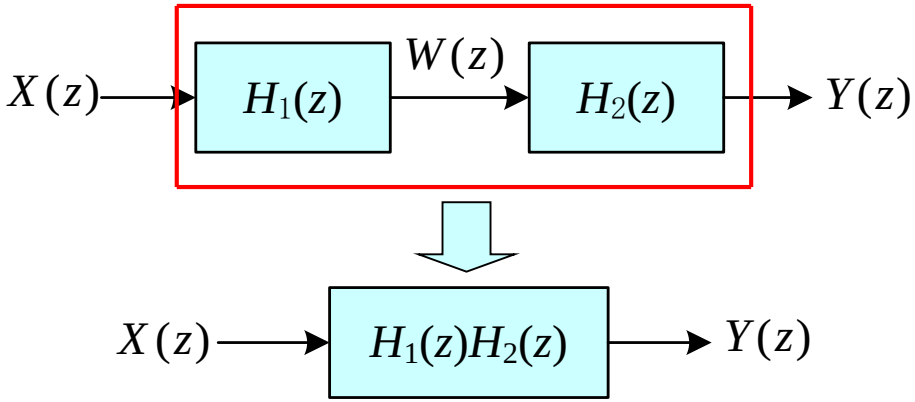

$$Y(z) = H_2(z)W(z) = H_2(z)H_1(z)X(z) \quad \Rightarrow \quad H(z) = H_1(z)H_2(z)$$

2. Parallel connection

- Parallel interconnection

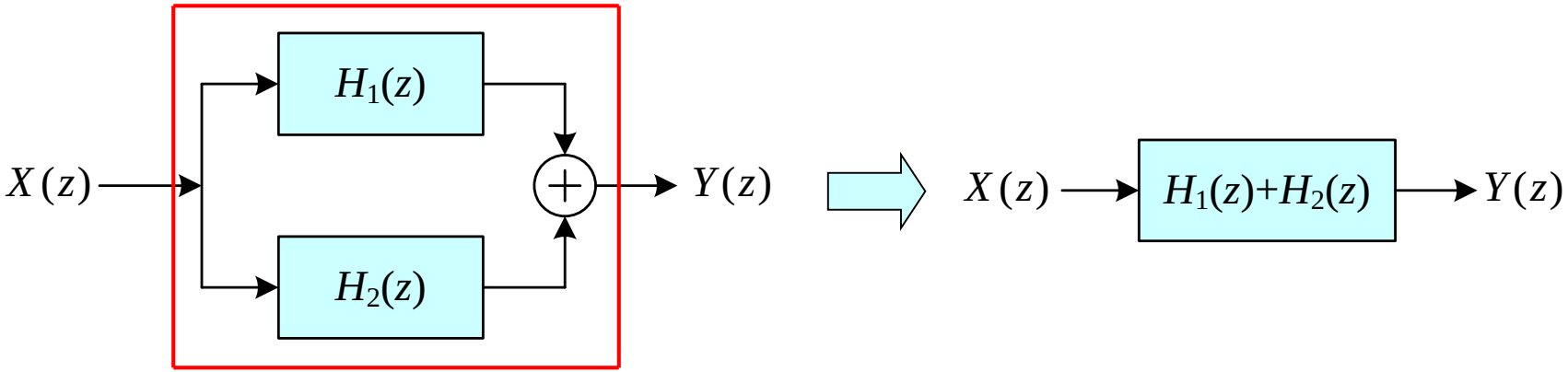

$$Y(z) = H_1(z)X(z) + H_2(z)X(z) = [H_1(z) + H_2(z)]X(z)$$

$$\Rightarrow \quad H(z) = H_1(z) + H_2(z)$$

3. Feedback interconnection

- Feedback interconnection

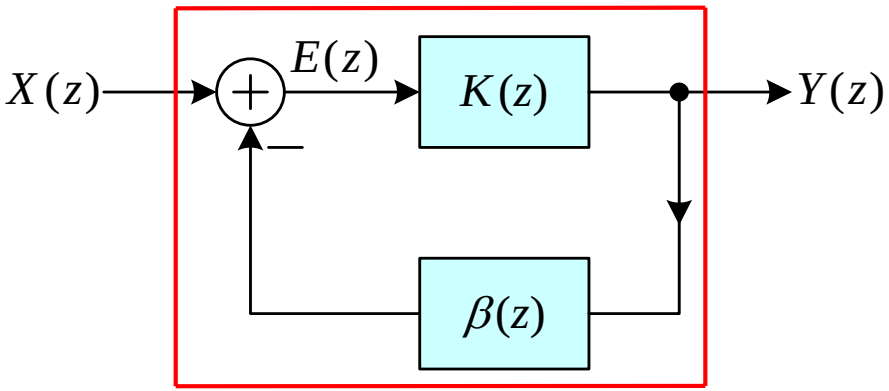

$$Y(z) = E(z)K(z)$$

$$E(z) = X(z) - \beta(z)Y(z)$$

$$Y(z) = \frac{K(z)}{1+\beta(z)K(z)} X(z) \quad \Rightarrow \quad H(z) = \frac{K(z)}{1+\beta(z)K(z)}$$

Example. Calculate the system function $H(z)$ of the D-T LTI system below.

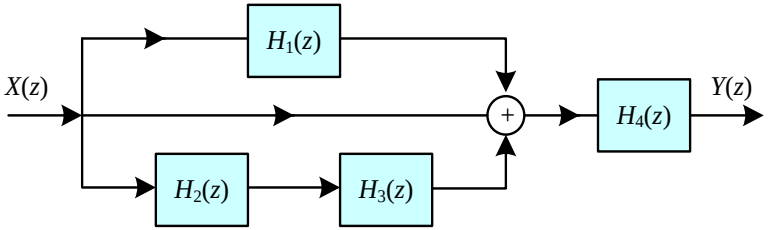

Solution:

$$H(z) = [H_1(z) + 1 + H_2(z)H_3(z)]H_4(z)$$

Example. Calculate the system function $H(z)$ of the D-T LTI system below.

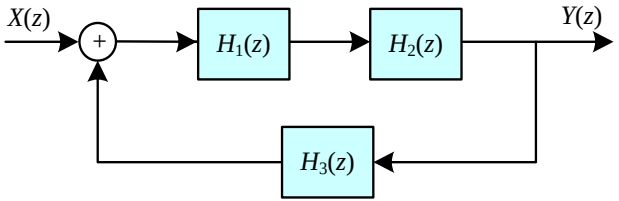

Solution:

$$Y(z) = H_2(z)X_2(z) = H_2(z)H_1(z)X_1(z) = H_2(z)H_1(z)[X(z) + H_3(z)Y(z)]$$

Rewrite $$Y(z)[1 - H_1(z)H_2(z)H_3(z)] = H_1(z)H_2(z)X(z)$$

$$H(z) = \frac{Y(z)}{X(z)} = \frac{H_1(z)H_2(z)}{1 - H_1(z)H_2(z)H_3(z)}$$

Block diagram representations for D-T systems

- Direct form
- Cascade form
- Parallel form

1. Direct form

For the difference equation,

$$y[k]+\sum_{j=1}^{n} a_j y[k-j]=\sum_{i=0}^{n} b_i x[k-i]$$

Suppose $m=n$,

$$H(z)=\frac{\sum_{i=0}^{n} b_i z^{-i}}{1+\sum_{j=1}^{n} a_j z^{-j}}=\underbrace{\frac{1}{1+\sum_{j=1}^{n} a_j z^{-j}}}_{H_1(z)}\bullet\underbrace{\sum_{i=0}^{n} b_i z^{-i}}_{H_2(z)}$$

1. Direct form

The system can be split into two subsystems:

$$H_1(z) = \frac{1}{1+\sum_{j=1}^{n} a_j z^{-j}} = \frac{W(z)}{X(z)} \qquad H_2(z) = \sum_{i=0}^{n} b_i z^{-i} = \frac{Y(z)}{W(z)}$$

Interpreted into difference equation,

$$w[k] + \sum_{j=1}^{n} a_j w[k-j] = x[k] \qquad y[k] = \sum_{i=0}^{n} b_i w[k-i]$$

1. Direct form

$$w[k]+\sum_{j=1}^{n} a_j w[k-j]=x[k] \qquad y[k]=\sum_{i=0}^{n} b_i w[k-i]$$

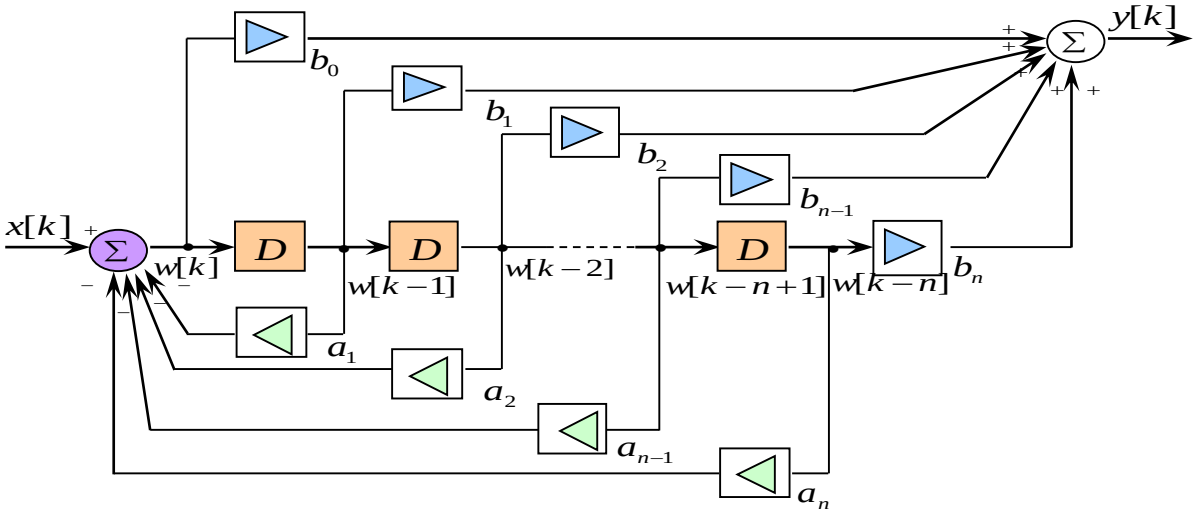

Block diagram in the time domain

1. Direct form

$$H(z) = \frac{b_0 + b_1 z^{-1} + \cdots + b_{n-1} z^{-(n-1)} + b_n z^{-n}}{1 + a_1 z^{-1} + \cdots + a_{n-1} z^{-(n-1)} + a_n z^{-n}}$$

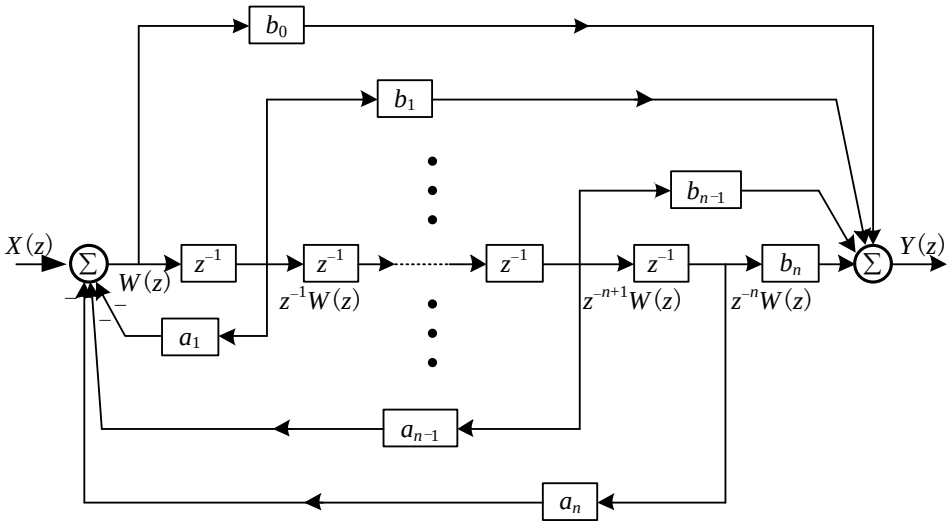

Block diagram in the z-domain

2. Cascade form

The system can be split into cascade of several 1st -or 2nd -order subsystems:

$$H(z) = H_1(z)\, H_2(z)\, \ldots\ldots\, H_n(z)$$

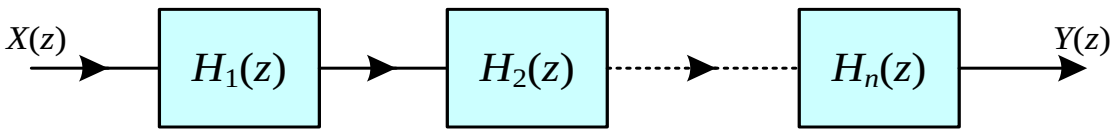

3. Parallel form

The system can be split into parallel of several 1st - or 2nd -order subsystems:

$$H(z) = H_1(z) + H_2(z) + \ldots + H_n(z)$$

Each subsystem is direct form.

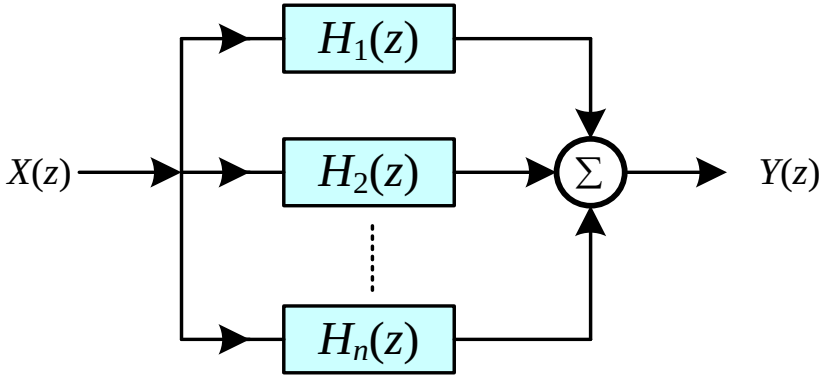

Example. The system function of a D-T LTI system is below. Draw the block diagram representation.

$$H(z)=\frac{1-z^{-1}-2z^{-2}}{1-\frac{1}{2}z^{-1}+\frac{1}{4}z^{-2}-\frac{1}{8}z^{-3}}$$

Solution: (1) Direct form

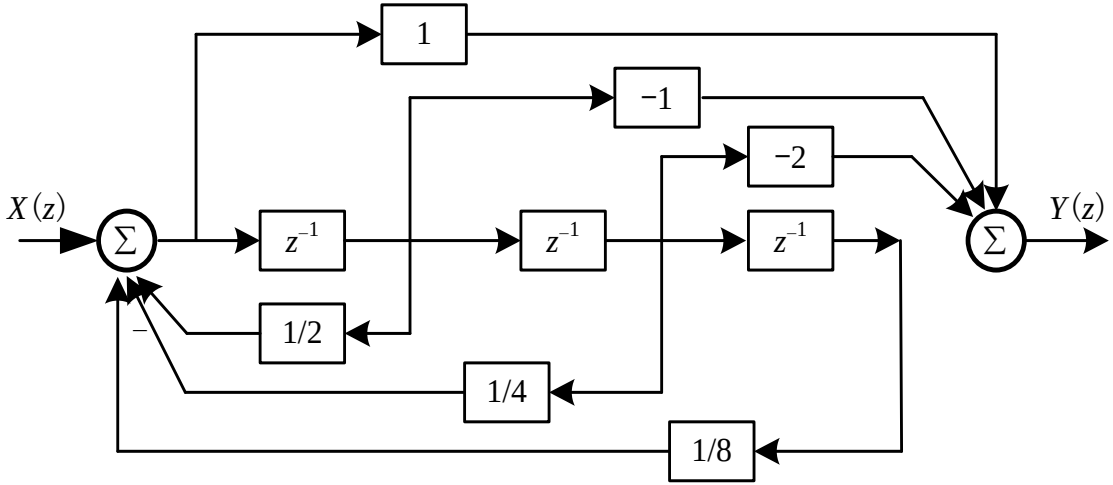

Example. The system function of a D-T LTI system is below. Draw the block diagram representation.

$$H(z)=\frac{1-z^{-1}-2z^{-2}}{1-\frac{1}{2}z^{-1}+\frac{1}{4}z^{-2}-\frac{1}{8}z^{-3}}$$

(2) Cascade form

$$H(z)=\frac{1-z^{-1}-2z^{-2}}{1-\frac{1}{2}z^{-1}+\frac{1}{4}z^{-2}-\frac{1}{8}z^{-3}}=\frac{1}{1-\frac{1}{2}z^{-1}}\cdot\frac{1-z^{-1}-2z^{-2}}{1+\frac{1}{4}z^{-2}}$$

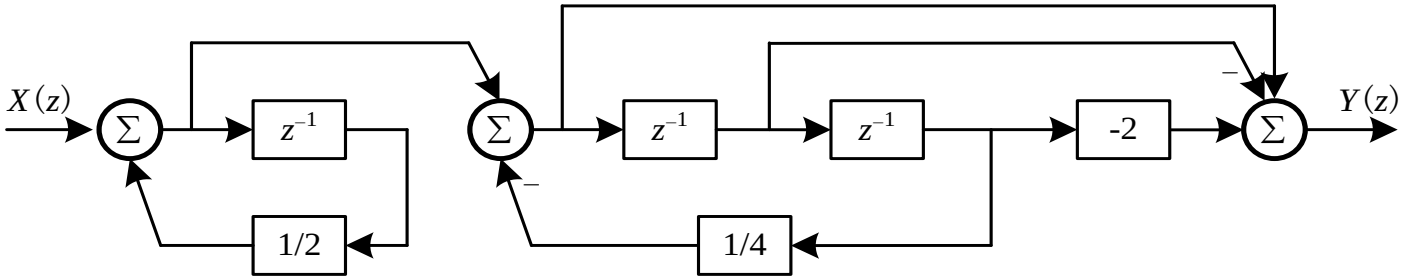

Example. The system function of a D-T LTI system is below. Draw the block diagram representation.

$$H(z)=\frac{1-z^{-1}-2z^{-2}}{1-\frac{1}{2}z^{-1}+\frac{1}{4}z^{-2}-\frac{1}{8}z^{-3}}$$

(3) Parallel form

$$H(z)=\frac{1-z^{-1}-2z^{-2}}{1-\frac{1}{2}z^{-1}+\frac{1}{4}z^{-2}-\frac{1}{8}z^{-3}}$$
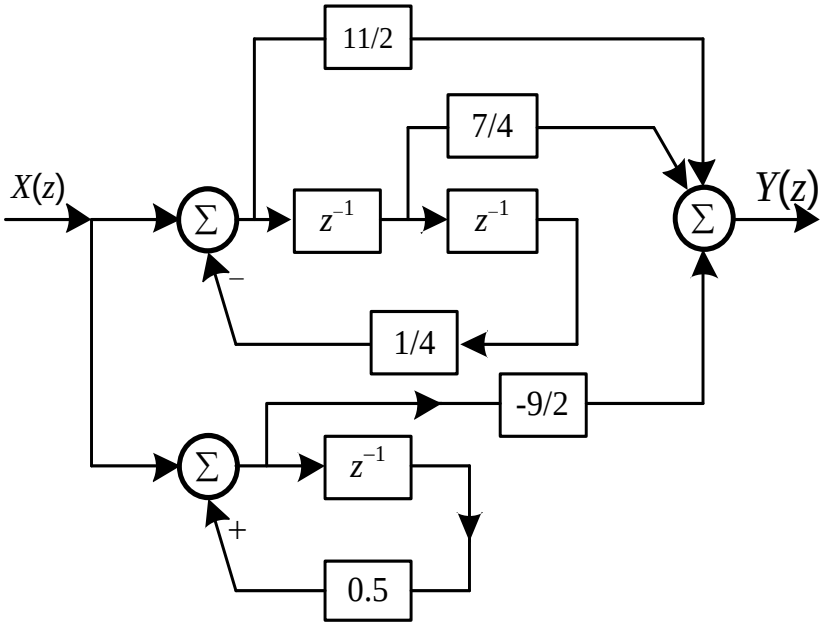
$$=\frac{-4.5}{1-0.5z^{-1}}+\frac{5.5+1.35z^{-1}}{1+0.25z^{-2}}$$